NON-CONTROLLED COPY	COPY ISSUED BY_____.
INFORMATION SUBJECT TO CHANGE WITHOUT NOTICE	
COPY WILL NOT BE UPDATED	COPY ISSUED ON_____.

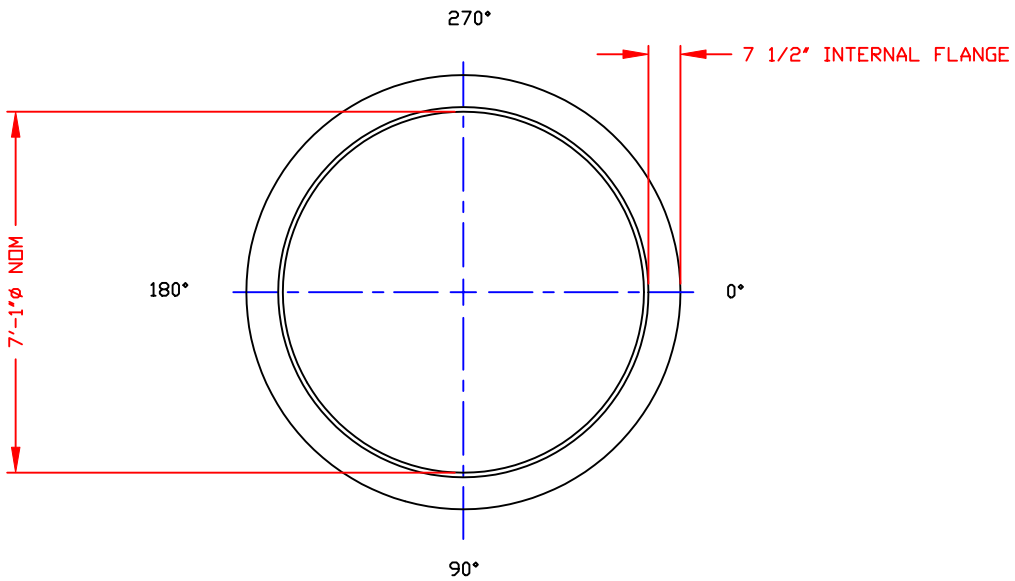

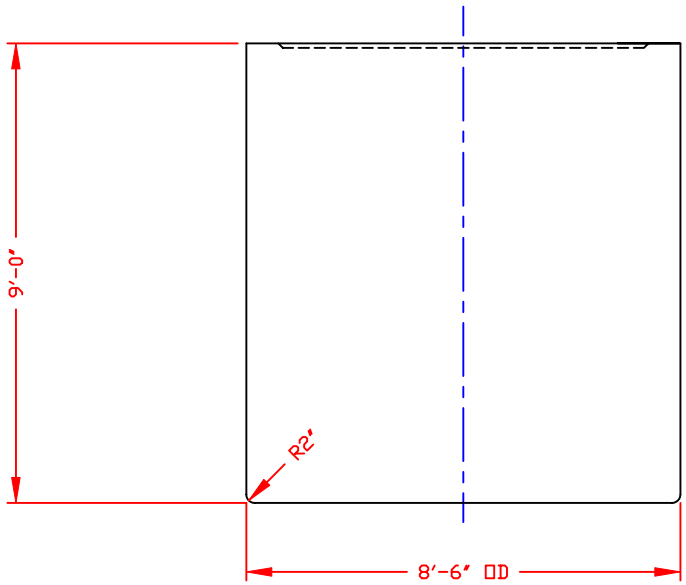

NOTE: A
MUST USE FLEXIBLE CONNECTIONS ALL LOWER SIDEWALL FITTINGS

NOZZLE SCHEDULE & ACCESSORIES

SERVICE	MK	STOCK NO.	SIZE	FITTING	DEG	ELEV

NOTES
1. THIS IS A COMPUTER GENERATED DWG. DO NOT REVISE BY HAND.
2. DIMENSIONS WILL VARY ±3% DUE TO VARIATIONS IN MULTIPLE MOLDS & CONDITIONS PREVALENT DURING MANUFACTURE & USAGE.
3. NO MOLDED IN GALLONAGE MARKERS THIS TANK.

CALCULATED CAPACITY VOLUME IN U.S. GALLONS
DESIGN CAPACITY
3685

CONFIDENTIAL PROPERTY OF POLY PROCESSING COMPANY NOT FOR REPRINT OR USE WITHOUT PERMISSION

DWG TITLE: 3650 GALLON OPEN TOP TANK

SCALE: 3/8"=1'-0"
DATE: 12/28/99

POLY PROCESSING Company
Central Region
P.O. Box 4150 (71211)
2201 Old Sterlington Rd.
Monroe, LA 71203
(318) 343-7565
FAX (318) 343-8795

DR: MB WILKERSON
CK: J. BRANTLEY

SHEET	COMPUTER FILE	REV
1 OF 1	1503650	A

REV "A" ADDED FITTING NOTE BY:MBW 4/14/03 CK:JB

B-375