NON-CONTROLLED COPY

INFORMATION SUBJECT TO CHANGE WITHOUT NOTICE

VERIFY REV LEVEL OF PAPER COPY WITH REV LEVEL ON PPC WEB SITE

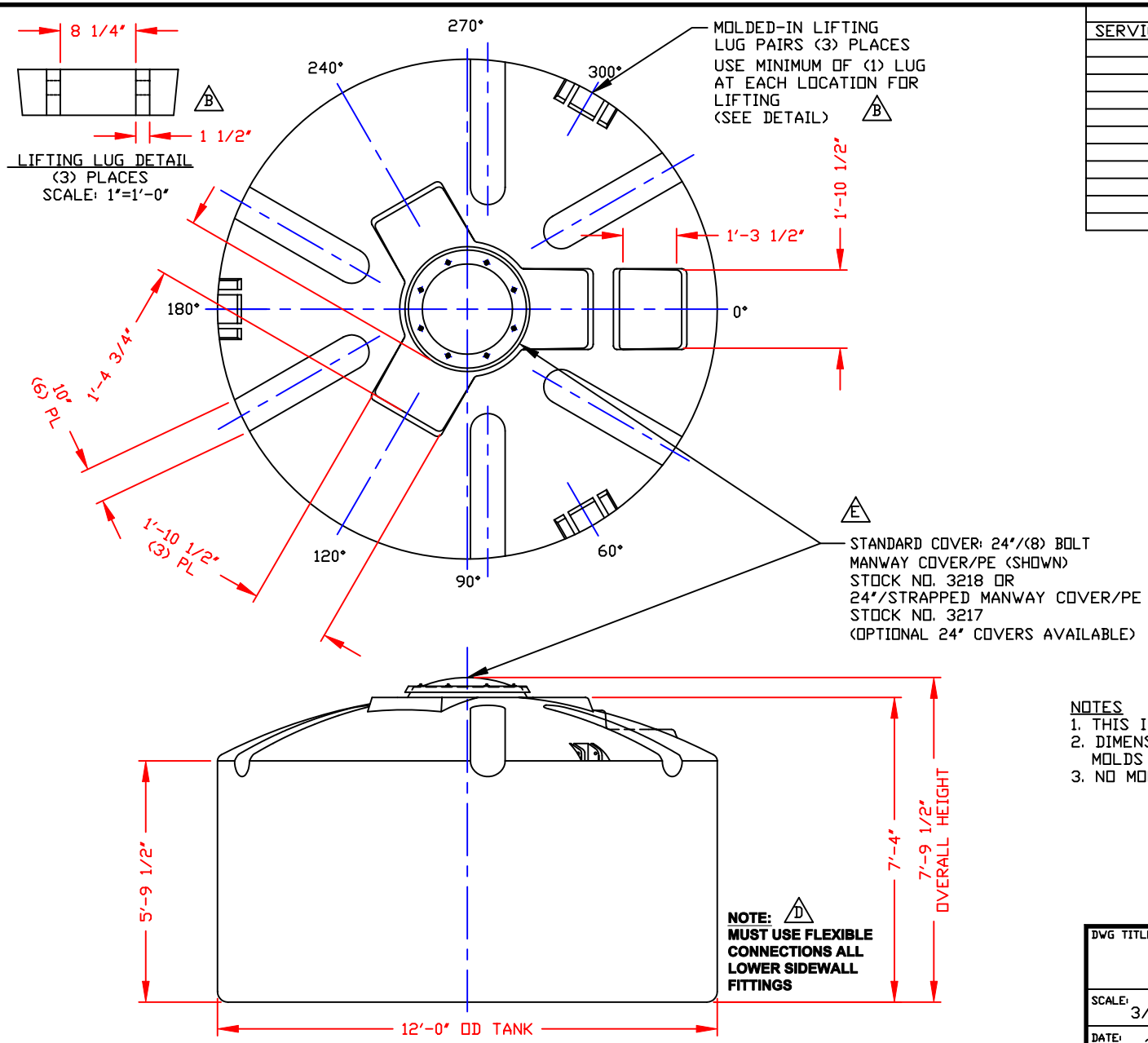

NOZZLE SCHEDULE & ACCESSORIES

SERVICE	MK	STOCK NO.	SIZE	FITTING	DEG	ELEV

NOTES

1. THIS IS A COMPUTER GENERATED DWG. DO NOT REVISE BY HAND.
2. DIMENSIONS WILL VARY ±3% DUE TO VARIATIONS IN MULTIPLE MOLDS & CONDITIONS PREVALENT DURING MANUFACTURE & USAGE.
3. NO MOLDED IN GALLONAGE MARKERS THIS TANK.

CALCULATED CAPACITIES/ VOLUME IN U.S. GALLONS		
DESIGN CAP	DOME VOL	TOTAL VOL
4900	588	5488

CONFIDENTIAL PROPERTY OF POLY PROCESSING COMPANY NOT FOR REPRINT OR USE WITHOUT PERMISSION

DWG TITLE: 4900 GALLON UPRIGHT TANK

SCALE: 3/8"=1'-0"

DATE: 3/2/00

POLYPROCESSING COMPANY

Western Region
P.O. Box 88
8033 South Ash Street
French Camp, CA 95231
(209) 982-4994
FAX (209) 982-0455

DR: MB WILKERSON

CK: D. RECTOR

SHEET	COMPUTER FILE	REV
1 OF 1	11004900	E

REV "D" ADDED FITTING NOTE BY:JB 2/19/03 CK:MBW

REV "C" REVISED STOCK NUMBER BY:JB 2/19/03 CK:MBW

REV "B" ADDED LIFTING LUGS & DETAIL BY:JB 2/19/03 CK:WM

REV "A" REVISED TO REFLECT MOLD MODIFICATION BY:MBW 9/28/00 CK:BT

REV "E" MOLD MODIFICATION BY:MBW 11/9/04 CK:JB

B-376