NON-CONTROLLED COPY

INFORMATION SUBJECT TO CHANGE WITHOUT NOTICE

VERIFY REV LEVEL OF PAPER COPY WITH REV LEVEL ON PPC WEB SITE

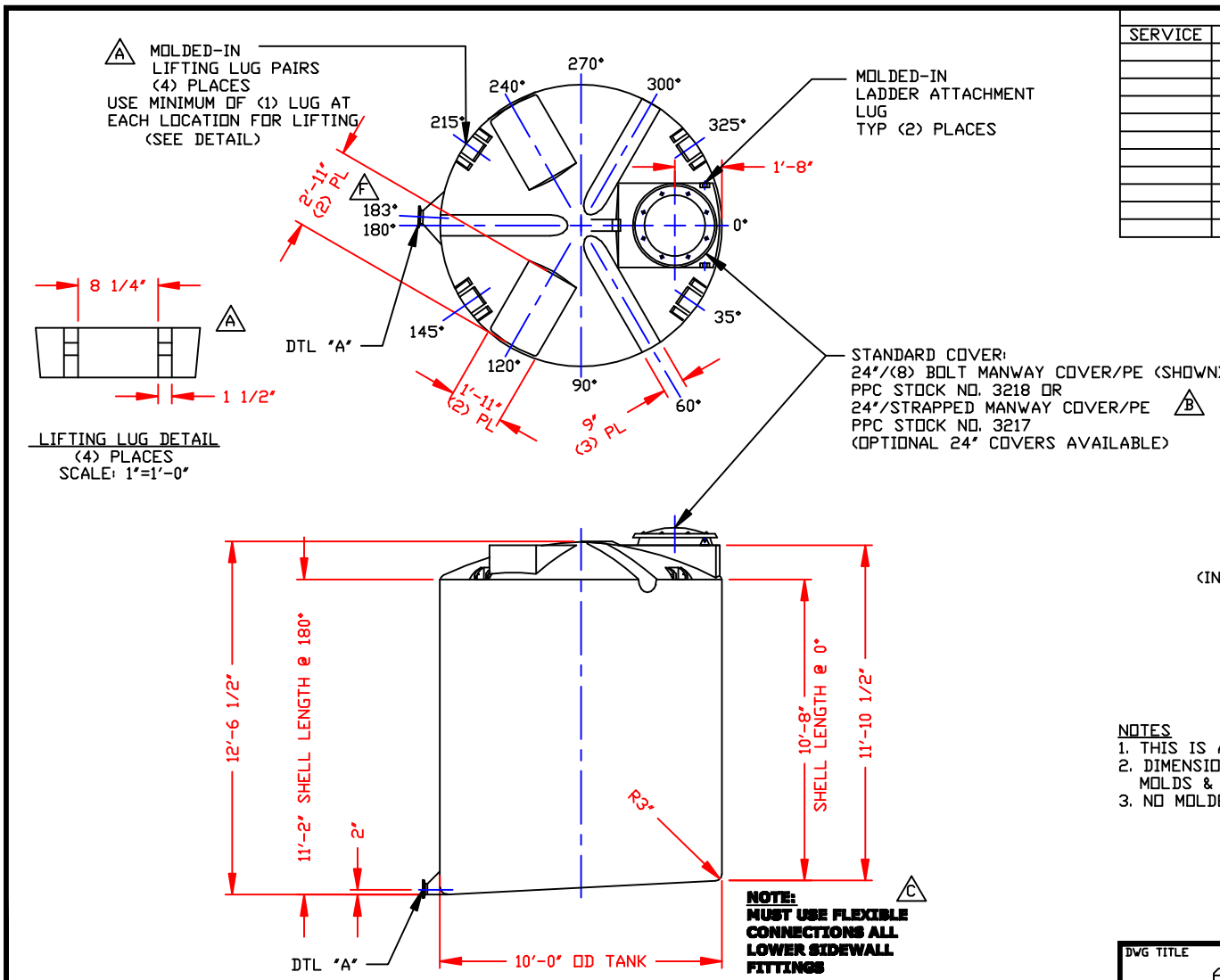

LIFTING LUG DETAIL
(4) PLACES
SCALE: 1"=1'-0"

NOTE:
MUST USE FLEXIBLE CONNECTIONS ALL LOWER SIDEWALL FITTINGS

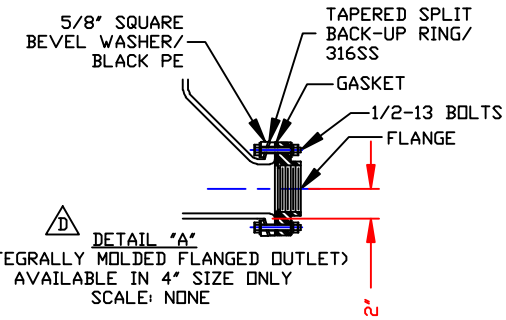

DETAIL "A"
(INTEGRALLY MOLDED FLANGED OUTLET)
AVAILABLE IN 4" SIZE ONLY
SCALE: NONE

NOZZLE SCHEDULE & ACCESSORIES

SERVICE	MK	STOCK NO.	SIZE	FITTING	DEG	ELEV

NOTES
1. THIS IS A COMPUTER GENERATED DWG. DO NOT REVISE BY HAND.
2. DIMENSIONS WILL VARY ±3% DUE TO VARIATIONS IN MULTIPLE MOLDS & CONDITIONS PREVALENT DURING MANUFACTURE & USAGE.
3. NO MOLDED IN GALLONAGE MARKERS THIS TANK.

CALCULATED CAPACITIES/ VOLUME IN U.S. GALLONS		
DESIGN CAP	DOME VOL	TOTAL VOL
6283	470	6753

CONFIDENTIAL PROPERTY OF POLY PROCESSING COMPANY NOT FOR REPRINT OR USE WITHOUT PERMISSION

DWG TITLE
6250 GALLON SLOPE BOTTOM IMFO TANK

SCALE: 1/4"=1'-0"
DATE: 3/17/00

POLY PROCESSING COMPANY

Western Region
P.O. Box 80
8055 South Ash Street
French Camp, CA 95231
(209) 982-4904
FAX (209) 982-0455

DR: MB WILKERSON
CK: D. RECTOR

SHEET 1 OF 1
COMPUTER FILE 11206250
REV F

REV "F" REVISED IMFO LOCATION BY:JB 8/7/09 CK:WM
REV "E" REVISED FOR MOLD MODIFICATIONS BY:JB 6/16/053 CK:WM
REV "D" REVISED IMFO STYLE BY:JB 4/30/03 CK:WM
REV "C" ADDED FITTING NOTE BY:JB 3/3/02 CK:MBW
REV "B" REVISED STOCK NUMBER BY:JB 3/3/02 CK:MBW
REV "A" ADDED LIFTING LUGS & DETAIL BY:JB 10/31/02 CK:WM

B-25