NON-CONTROLLED COPY	COPY ISSUED BY_____
INFORMATION SUBJECT TO CHANGE WITHOUT NOTICE	
COPY WILL NOT BE UPDATED	COPY ISSUED ON_____

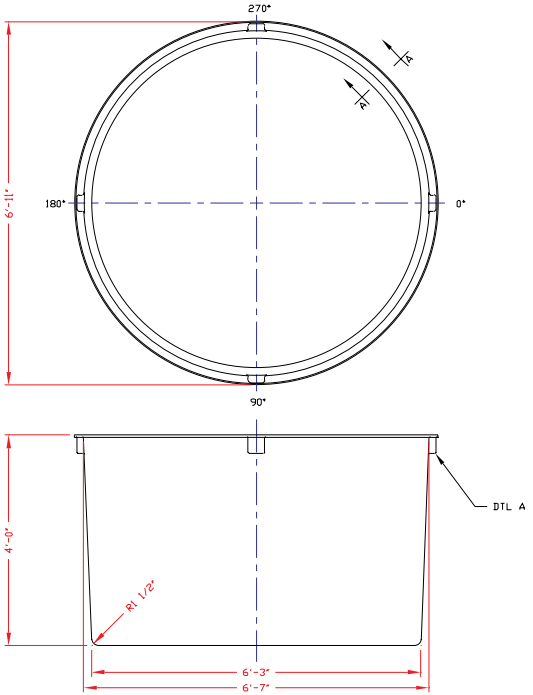

NOZZLE SCHEDULE & ACCESSORIES

SERVICE	MK	STOCK NO	SIZE	FITTING	DEG	ELEV

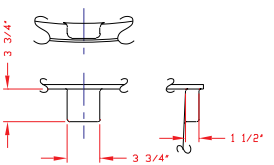

DETAIL A
SCALE: 1 1/2"=1'-0"

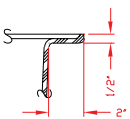

SECTION A-A
SCALE: 3"=1'-0"

NOTES:
1. THIS IS A COMPUTER GENERATED DWG. DO NOT REVISE BY HAND.
2. DIMENSIONS WILL VARY ±3% DUE TO VARIATIONS IN MULTIPLE MOLDS & CONDITIONS PREVALENT DURING MANUFACTURE & USAGE.

CALCULATED CAPACITIES/ VOLUME IN U.S. GALLONS
DESIGN CAPACITY
935

CONFIDENTIAL PROPERTY OF POLY PROCESSING COMPANY NOT FOR REPRINT OR USE WITHOUT PERMISSION

DWG TITLE
935 GALLON CYLINDRICAL SECONDARY CONTAINMENT

SCALE: 3/4"=1'-0"
DATE: 12/30/99

POLY PROCESSING Company
Corporate Headquarters
P.O. Box 4000 - 7500 Hwy 12
Sioux Falls, SD 57117-4000
Phone: 605.332.5500
Fax: 605.332.5510
800.843.7655

DR: MB WILKERSON
CK: J. BRANTLEY

SHEET	COMPUTER FILE	REV
1 OF 1	1500935	-