NON-CONTROLLED COPY

INFORMATION SUBJECT TO CHANGE WITHOUT NOTICE

VERIFY REV LEVEL OF PAPER COPY WITH REV LEVEL ON PPC WEB SITE

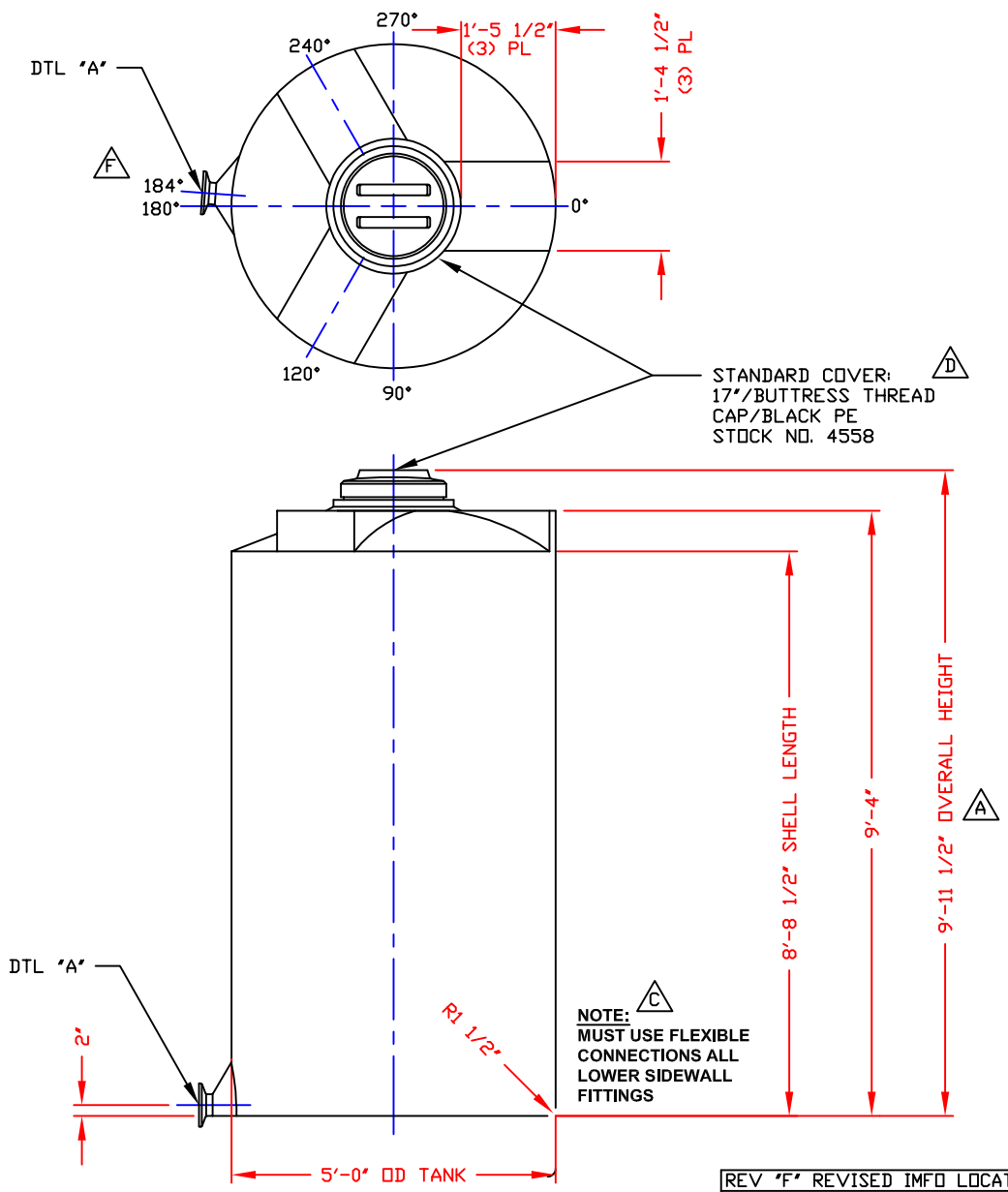

NOZZLE SCHEDULE & ACCESSORIES

SERVICE	MK	STOCK NO.	SIZE	FITTING	DEG	ELEV

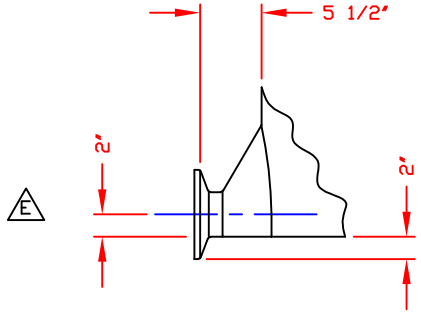

DETAIL "A"
(INTEGRALLY MOLDED FLANGED OUTLET)
AVAILABLE IN 3" SIZE ONLY
SCALE: 1"=1'-0"

NOTES
1. THIS IS A COMPUTER GENERATED DWG. DO NOT REVISE BY HAND.
2. DIMENSIONS WILL VARY ±3% DUE TO VARIATIONS IN MULTIPLE MOLDS & CONDITIONS PREVALENT DURING MANUFACTURE & USAGE.
3. NO MOLDED IN GALLONAGE MARKERS THIS TANK.

CALCULATED CAPACITIES/ VOLUME IN U.S. GALLONS

DESIGN CAP	DOME VOL	TOTAL VOL
1258	48	1306

CONFIDENTIAL PROPERTY OF POLY PROCESSING COMPANY NOT FOR REPRINT OR USE WITHOUT PERMISSION

REV	
"F"	REVISED IMFO LOCATION BY:JB 8/7/09 CK:WM
"E"	REVISED IMFO STYLE BY:MBW 2/20/04 CK:JB
"D"	CORRECTED LID BY:MBW 2/20/04 CK:JB
"C"	ADDED FITTING NOTE BY:JB 2/27/03 CK:MBW
"B"	REVISED STOCK NUMBER BY:JB 2/27/03 CK:MBW
"A"	ADDED DIMENSION BY:JB 10/16/02 CK:MBW

DWG TITLE: 1250 GALLON IMFO TANK

SCALE: 1/2"=1'-0"

DATE: 09/25/19

POLYPROCESSING SOLUTIONS, SIMPLIFIED.
Western Region
P.O. Box 80
8055 South Ash Street
French Camp, CA 95231
(209) 982-4994
FAX (209) 982-0455

DR: B. HARPER

CK:

SHEET	COMPUTER FILE	REV
1 OF 1	IMFO-F-01250	F

B-5