NON-CONTROLLED COPY

INFORMATION SUBJECT TO CHANGE WITHOUT NOTICE

VERIFY REV LEVEL OF PAPER COPY WITH REV LEVEL ON PPC WEB SITE

REV "A" ADDED DIMENSION BY:JB 10/18/02 CK:MBW
REV "B" ADDED LIFTING LUGS & DETAIL BY:JB 1/20/03 CK:WM
REV "C" REVISED STOCK NUMBER BY:JB 1/20/03 CK:WM
REV "D" ADDED FITTING NOTE BY:JB 2/5/03 CK:MBW
REV "E" REVISED IMFO STYLE BY:JB 5/5/03 CK:WM
REV "F" REVISED MANWAY COVER BY:JB 2/3/05 CK:WM
REV "G" ADDED LADDER ATTACHMENT LUGS BY:JB 2/3/05 CK:WM

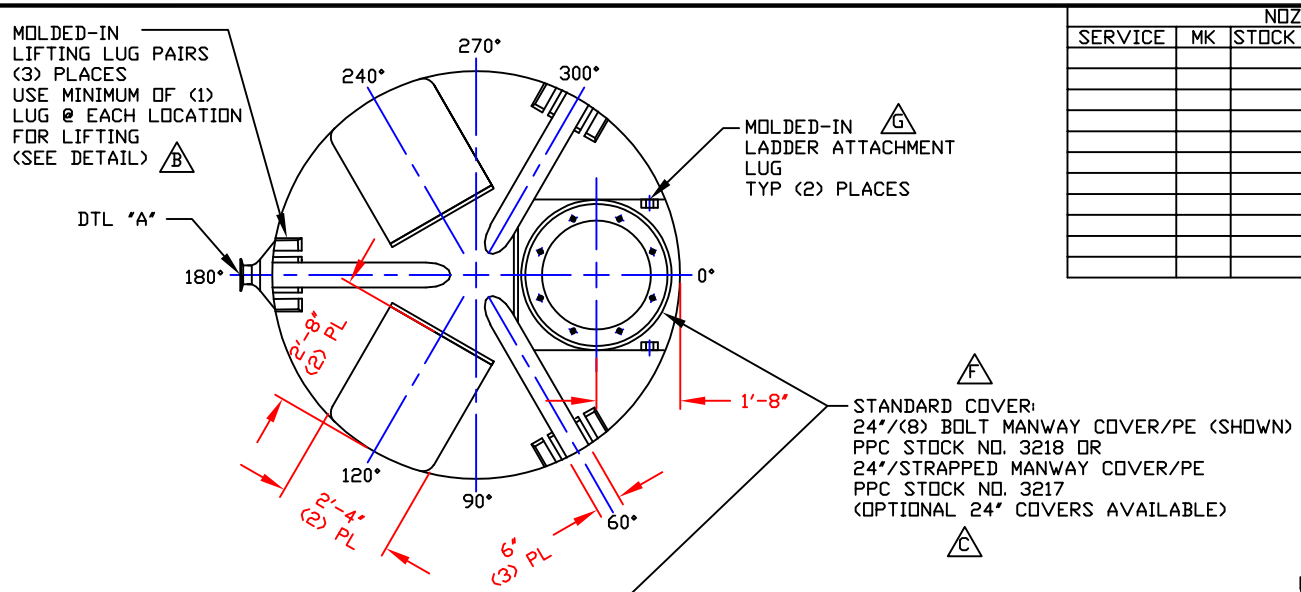

NOZZLE SCHEDULE & ACCESSORIES

SERVICE	MK	STOCK NO.	SIZE	FITTING	DEG	ELEV

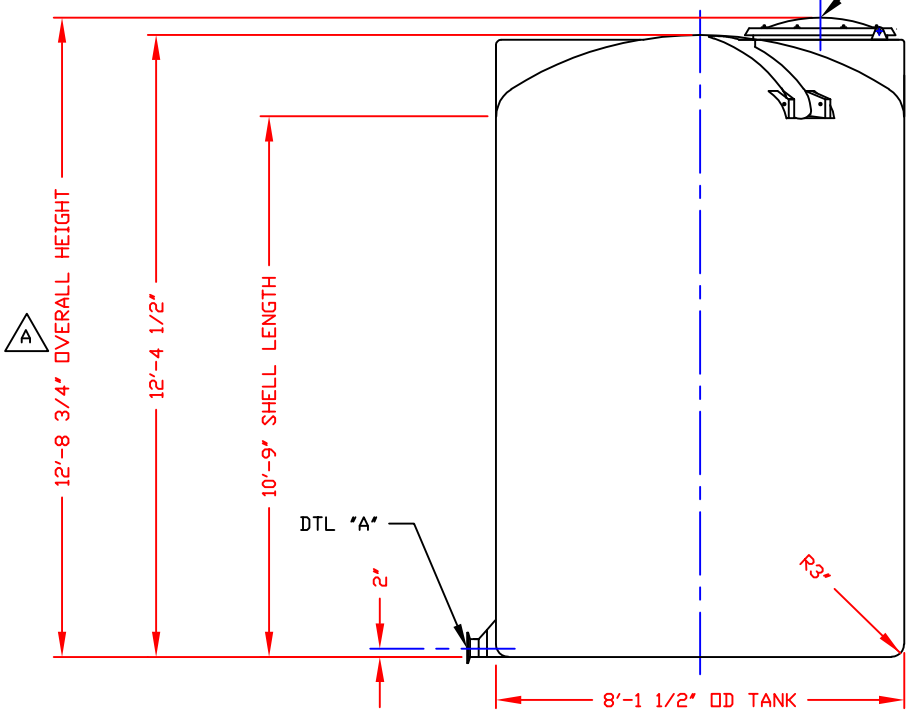

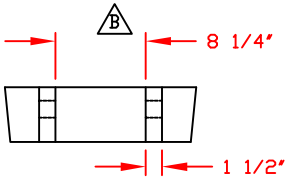

LIFTING LUG DETAIL
(3) PLACES
SCALE: 1"=1'-0"

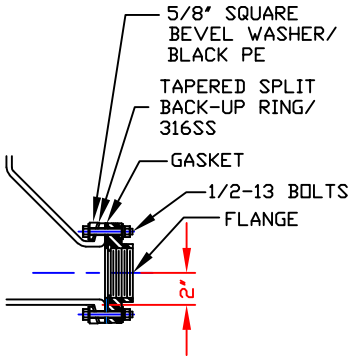

DETAIL "A"
(INTEGRALLY MOLDED FLANGED OUTLET)
AVAILABLE IN 3" SIZE ONLY
SCALE: NONE

D

NOTE:
MUST USE FLEXIBLE CONNECTIONS ALL LOWER SIDEWALL FITTINGS

NOTES
1. THIS IS A COMPUTER GENERATED DWG. DO NOT REVISE BY HAND.
2. DIMENSIONS WILL VARY ±3% DUE VARIATIONS IN MULTIPLE MOLDS & CONDITIONS PREVALENT DURING MANUFACTURE & USAGE.
3. NO MOLDED IN GALLONAGE MARKERS THIS TANK.

CALCULATED CAPACITIES/ VOLUME IN U.S. GALLONS		
DESIGN CAP	DOME VOL	TOTAL VOL
4083	327	4410

CONFIDENTIAL PROPERTY OF POLY PROCESSING COMPANY NOT FOR REPRINT OR USE WITHOUT PERMISSION

DWG TITLE: 4050 GALLON IMFO TANK

SCALE: 3/8"=1'-0"

DATE: 09/25/19

PolyProcessing
SOLUTIONS, SIMPLIFIED.
Western Region
P.O. Box 80
8655 South Ash Street
French Camp, CA 95231
(209) 982-4904
FAX (209) 982-0455

DR: B. HARPER

CK:

SHEET	COMPUTER FILE	REV
1 OF 1	IMFO-F-04050	G

B-375