NON-CONTROLLED COPY

INFORMATION SUBJECT TO CHANGE WITHOUT NOTICE

VERIFY REV LEVEL OF PAPER COPY WITH REV LEVEL ON PPC WEB SITE

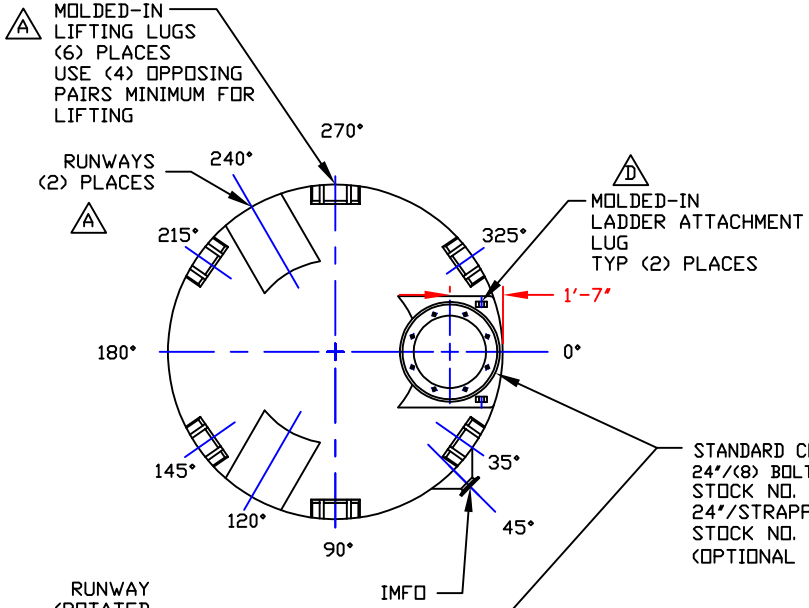

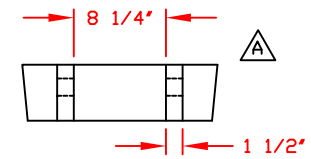

LIFTING LUG DETAIL
(6) PLACES
SCALE: 1"=1'-0"

NOZZLE SCHEDULE & ACCESSORIES						
SERVICE	MK	STOCK NO.	SIZE	FITTING	DEG	ELEV

IMFO AVAILABLE IN 4" PIPE SIZE ONLY

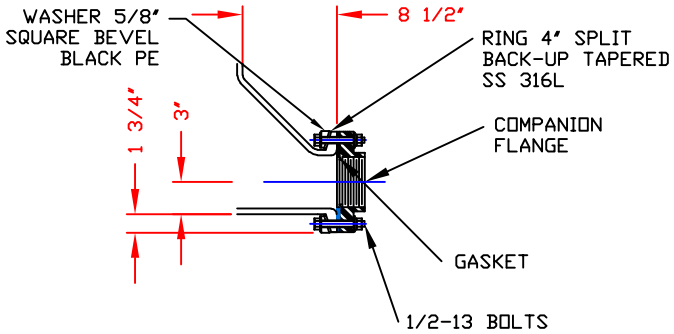

IMFO NOZZLE DETAIL
(INTEGRALLY MOLDED FLANGED OUTLET)
SCALE: NONE

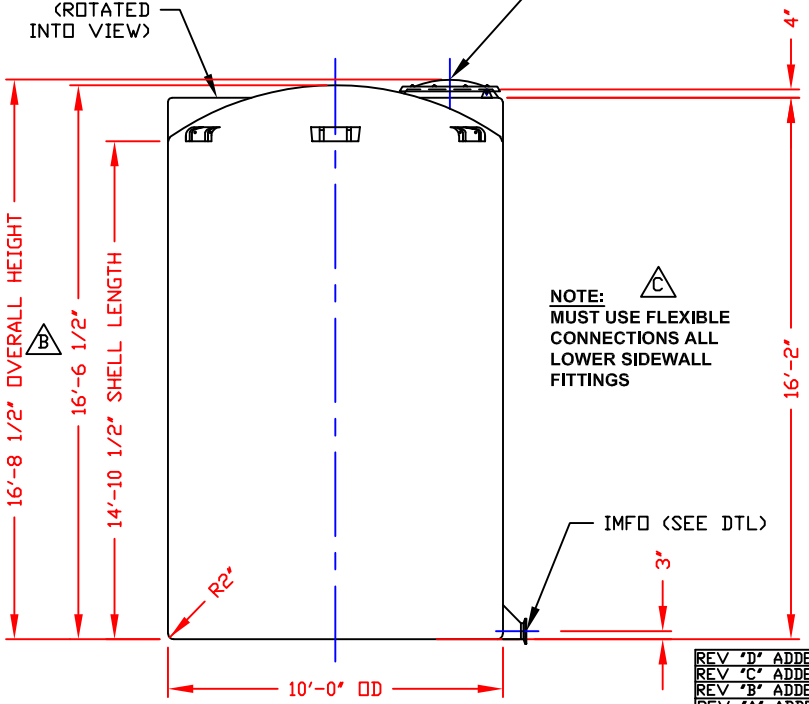

C
NOTE:
MUST USE FLEXIBLE CONNECTIONS ALL LOWER SIDEWALL FITTINGS

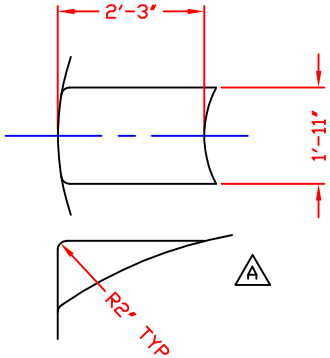

RUNWAY DETAIL
(2) PLACES
SCALE: 3/8"=1'-0"

NOTES

1. THIS IS A COMPUTER GENERATED DWG. DO NOT REVISE BY HAND
2. DIMENSIONS WILL VARY ±3% DUE TO VARIATIONS IN MULTIPLE MOLDS & CONDITIONS PREVALENT DURING MANUFACTURE & USAGE.
3. MOLDED IN GALLONAGE MARKERS @ APPROX 54" IN 200 GAL INCREMENTS UP TO 8200 GAL.

CALCULATED CAPACITIES/ VOLUME IN U.S. GALLONS		
DESIGN CAP	DOME VOL	TOTAL VOL
8512	399	8911

CONFIDENTIAL PROPERTY OF POLY PROCESSING COMPANY NOT FOR REPRINT OR USE WITHOUT PERMISSION

REV	
REV "D" ADDED LADDER ATTACHMENT LUGS BY:JB 5/14/04 CK:WM	
REV "C" ADDED FITTING NOTE BY:MBW 3/3/03 CK:JB	
REV "B" ADDED DIMENSION BY:JB 10/21/02 CK:MBW	
REV "A" ADDED RUNWAYS, LIFTING LUGS & DETAILS/REMOVED GUTTERS BY:JB 1/28/02 CK:WM	

DWG TITLE: 8500 GALLON IMFO TANK

SCALE: 1/4"=1'-0"

DATE: 09/19/19

PolyProcessing SOLUTIONS, SIMPLIFIED.

Central Region
P.O. Box 4159 (71210)
2201 Old Sterlington Rd.
Monroe, LA 71203
(318) 343-7565
FAX (318) 343-8795

DR: B. HARPER

CK:

SHEET: 1 OF 1

COMPUTER FILE: IMFO-F-08500

REV: D

B-25