NON-CONTROLLED COPY

INFORMATION SUBJECT TO CHANGE WITHOUT NOTICE

VERIFY REV LEVEL OF PAPER COPY WITH REV LEVEL ON PPC WEB SITE

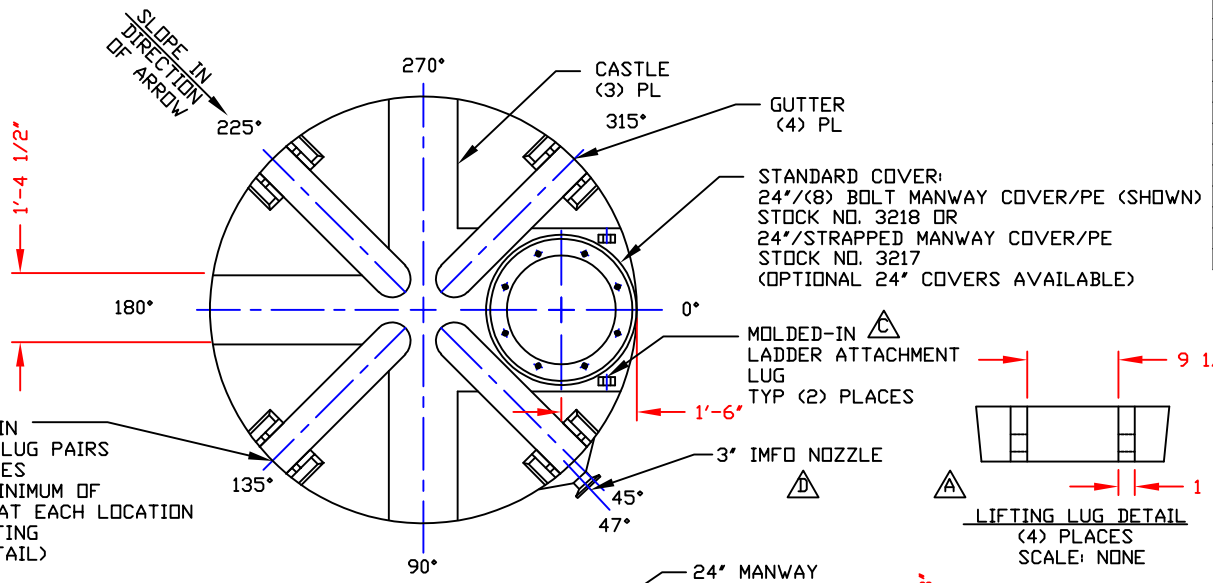

NOZZLE SCHEDULE & ACCESSORIES						
SERVICE	MK	STOCK NO.	SIZE	FITTING	DEG	ELEV

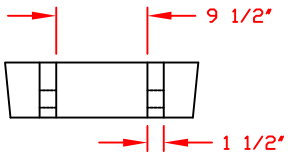

LIFTING LUG DETAIL
(4) PLACES
SCALE: NONE

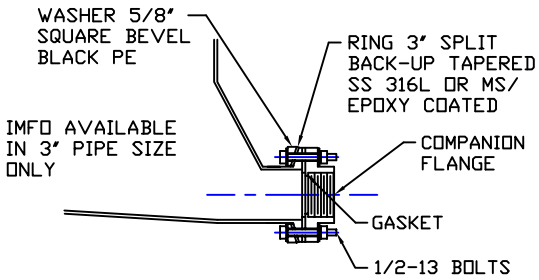

IMFO NOZZLE DETAIL
(INTEGRALLY MOLDED FLANGED OUTLET)
SCALE: NONE

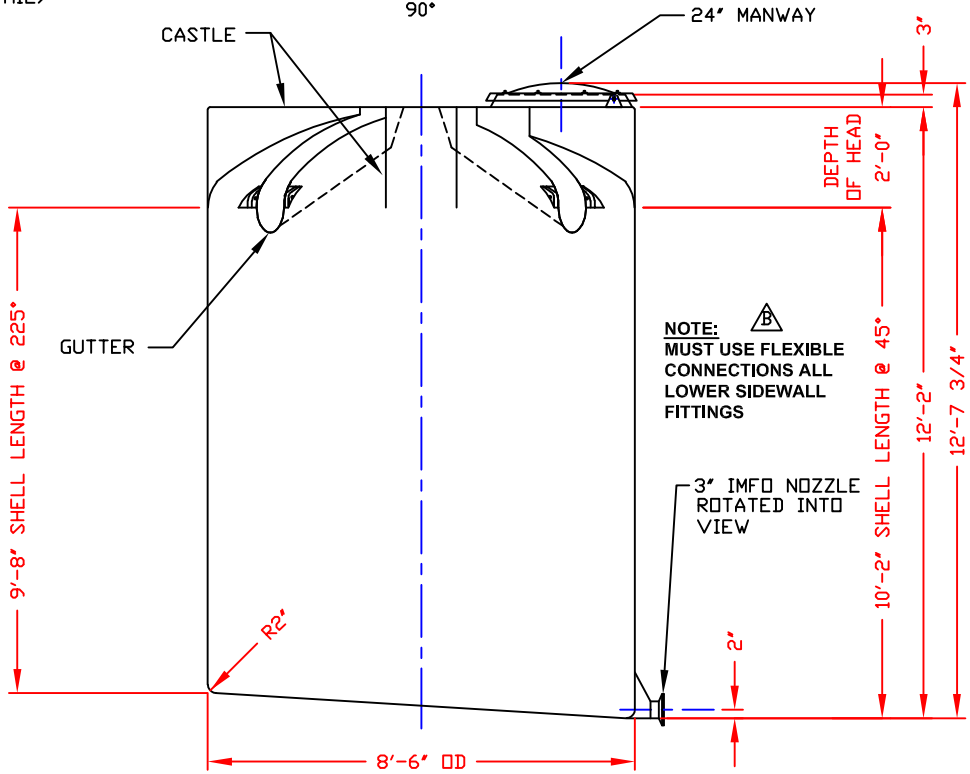

NOTE: B
MUST USE FLEXIBLE CONNECTIONS ALL LOWER SIDEWALL FITTINGS

NOTES
1. THIS IS A COMPUTER GENERATED DWG. DO NOT REVISE BY HAND.
2. DIMENSIONS WILL VARY ±3% DUE TO VARIATIONS IN MULTIPLE MOLDS & CONDITIONS PREVELANT DURING MANUFACTURE & USAGE.
3. NO MOLDED IN GALLONAGE MARKERS THIS TANK.

CALCULATED CAPACITIES/ VOLUME IN U.S. GALLONS		
DESIGN CAP	DOME VOL	TOTAL VOL
4126	245	4371

CONFIDENTIAL PROPERTY OF POLY PROCESSING COMPANY NOT FOR REPRINT OR USE WITHOUT PERMISSION

DWG TITLE: 4100 GALLON SLOPE BOTTOM IMFO TANK

SCALE: 3/8"=1'-0"

DATE: 09/09/19

POLY PROCESSING COMPANY
Central Region
P.O. Box 4159 (71210)
2201 Old Sterlington Rd.
Monroe, LA 71203
(318) 343-7565
FAX (318) 343-8795

DR: B. HARPER

CK:

SHEET	COMPUTER FILE	REV
1 OF 1	IMFO-S-04100	D

REV "A" ADDED LIFTING LUGS & DETAIL BY:JB 1/16/03 CK:WM
REV "B" ADDED FITTING NOTE BY:MBW 3/3/03 CK:JB
REV "C" ADDED LADDER ATTACHMENT LUGS BY:JB 7/8/04 CK:WM
REV "D" IMFO RELOCATED BY:JB 8/12/09 CK:WM